tapflo®

CTP PLASTIC CENTRIFUGAL PUMPS

2020 | 2

All about your flow™

www.tapflo.com

All about your flow™

We began our journey 40 years ago in Kungälv, a small town on the Swedish west coast, as a family company with an ambition to one day become a global player on the pump market.

Since 1980, we have taken pride in delivering a wealth of knowledge and passion for pumps to the industry, whilst supplying a wide range of premium products for various industrial applications.

Over the years, the company has developed into a global Tapflo Group with branches and distributors present in nearly every region of the world.

One thing did not change - we are still a family company.

Our solutions are designed and manufactured in Europe and distributed globally to offer the best service and flow solutions to our customers for a variety of applications.

Our values, Commitment, Quality and Simplicity are reflected both in our product and business approach.

For fast and flexible service and high-quality products readily available worldwide, choose Tapflo.

Quality commitment

At Tapflo we are simply committed to quality. As a result, our production standards, as well as products quality, comply with various globally recognised certification and quality control standards. The Tapflo manufacturing process is certified according to ISO 9001:2015, confirming that our processes are appropriate, effective, customer-focused and continuously improved.

Tapflo values

Our culture is concluded in Our values

Commitment

We are different from our competitors because of our willingness to exceed the customers' expectations, move fast and be flexible. Our culture is based on the spirit of togetherness, enthusiasm and integrity. We come from all over the world but we share the same values and we respect each other. We are committed.

Quality

We understand that the quality in our work is never better than the weakest link, that's why we focus on every small detail. We share a common passion for continuously finding more efficient and effective ways to provide value to our customers. As a manufacturer we have control of the complete process both in terms of our products and the way we operate internally. That is why we manufacture the highest quality pumps in our segment.

Simplicity

We have a saying, "Simple is art" which means we try to find smooth and uncomplicated solutions in everything. By keeping it simple we can focus on the essential, like designing uncomplicated pumps with few components. For us it is a key to success; strive to simplify what is complex.

CTP Plastic Pumps

The CTP pumps are semi-open impeller single stage centrifugal pumps. Since there are no metal parts on the liquid side, the pumps are ideal for chemical transfer and circulation duties. CTP is a compact and reliable mechanically sealed centrifugal pump made in PP and PVDF. It is the right solution for liquids containing solid particles.

CTP32

CTP50

Wide range of applications

Transfer of chemicals
Transfer of various chemicals from storage tanks to smaller containers.

Surface treatment
Transfer, filtering and circulation of surface treatment baths.

Food and beverage
Pumping of CIP detergent used for cleaning of pipes and other food process equipment.

Water treatment
Fluid transfer in water treatment installations.

Chemical manufacture
Pumping of chemicals in industrial detergent equipment.

Demineralization
Demi-water circulation and transfer in many industrial applications.

Photo processing
Transfer of photo development chemicals and inclusion in processing machines.

Liquid crystal manufacture
Pumping of concentrated acids and alkalis.

Features & Benefits

- ✓ **Mechanical seal**
  spring on dry side and thereby not exposed to the pumped liquid; different seal face materials available to suit various applications
- ✓ **PP & PVDF wetted materials**
  Can handle highly corrosive liquids
- ✓ **No metal parts in contact with the liquid**
- ✓ **Semi-open impeller**
  Allows pumping liquids with particles up to Ø 3 mm
- ✓ **Few parts**
  Low maintenance, easy to handle
- ✓ **Optional flange and hose connections**

Robust and compact design

Mechanical seal

The **spring is located on the dry side of the pump** therefore all metallic parts are protected against contact with the liquid. This means no elastic bellow is required.

PP & PVDF wetted materials

Can handle highly corrosive liquids also containing solids and metallic particles. Pumps can handle high temperature liquids alkali and acids. The version in **PP-GF** (glass fibre reinforced polypropylene) provides great mechanical strength and allows liquid temperatures **up to 70°C**. The **PVDF** (polyvinylidene fluoride) version has superior chemical resistance and allows temperatures **up to 90°C**.

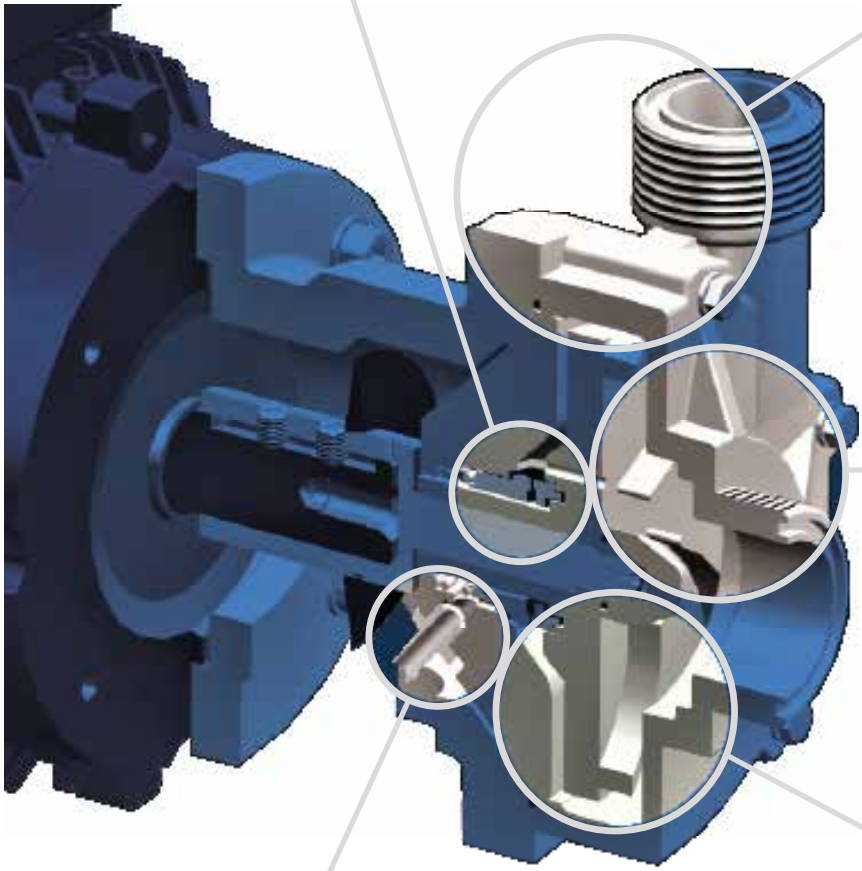

Chemically resistant pumps

The wetted components are non-metallic injection moulded thermoplastics enabling **excellent corrosion resistance.**
The **shaft is protected by means of a plastic sleeve** and nut compatible with the pump housing material.

Safety drain

The special revision hole in the back casing provides a **drainage from the mechanical seal in case any leakage occurs**. This prevents the motor and shaft from getting into contact with the pumped liquid. The PVDF barb connector allows plug a hose and route the liquid out of the pump.

Semi open impeller

Allows pumping liquids with particles up to **Ø 3 mm and 10% in concentration.**
A semi open impeller also **improves the transfer of liquids with higher viscosity.**

Performance curves

The performance curves are based on water. (T=20 °C, ρ=1000 kg/m³, n=2900 rpm)

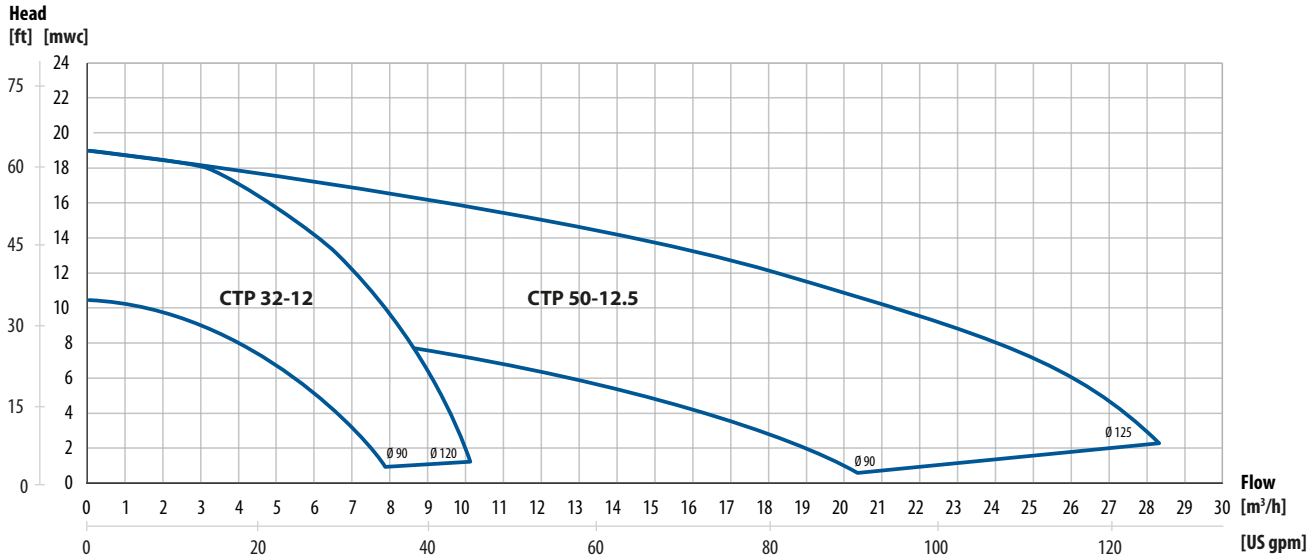

Technical data

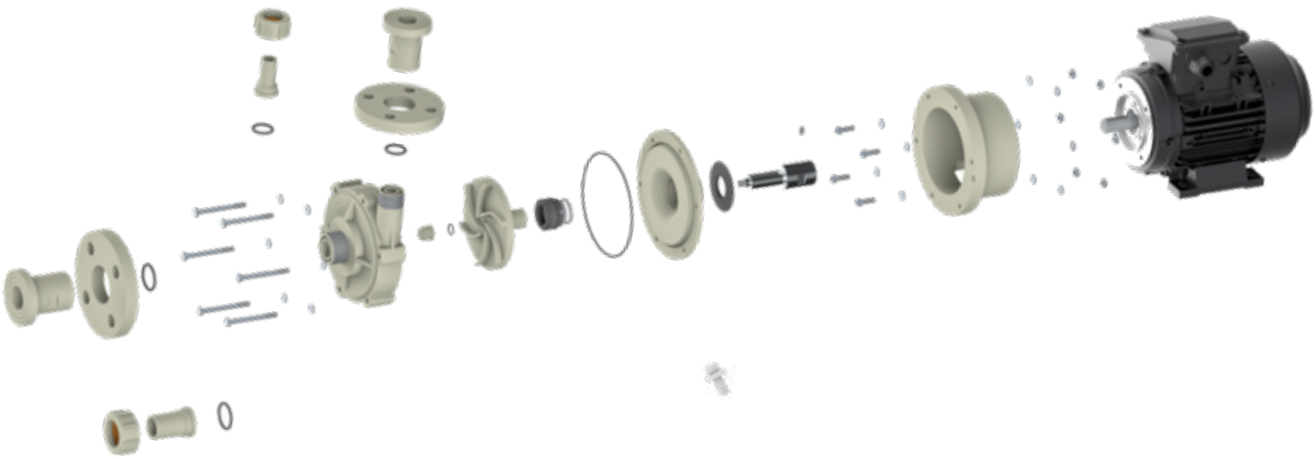

Materials and limits

Casing	PP-GF (30%) or PVDF
Back casing	PP or PVDF
Impeller	PP or PVDF
Lantern (not wetted)	PP
Mechanical seal	Rotating part: SiC or Graphite, Stationary part: SiC, Spring: AISI 316
O-rings	EPDM, FFKM, FEP/FKM
Shaft	AISI 316L stainless steel (standard) or Hastelloy® C-276
Motor	Standard IEC, 3x400 VAC, 2900 rpm, IP55, B34 frame
Pressure rating	PP pumps: PN6 at 20°C; PN2 at 70°C; PVDF pumps: PN6 at 20°C; PN2 at 90°C
Temperature	PP pumps: 0°C - 70°C; PVDF pumps: 0°C - 90°C
Viscosity	max ~200 cSt

[1]Hastelloy® C is a registered trademark of Haynes International, Inc.

Dimensions

Dim	Pump model			
	CTP32		CTP50	
Motor				
Power	0,75 kW	1,1 kW	3 kW	4 kW
Size	80		100	112
A	105		110	
B	56		54	
C	98		125	
øE	15		30.8	
øF	23		42	
G	G 1¼"		G 2"	
H	G 1"		G 1½"	
L	304		382	389
M	50		63	70
N	100		140	
P	15		12	
Q	80		100	112
R	58.5		52	
S	125		160	190
T	160		184	219
U	10		12	
Flange connection DIN (optional)				
Inlet	DN32		DN50	
Outlet	DN25		DN40	
Flange connection ANSI (optional)				
Inlet	1¼"		2"	
Outlet	1"		1½"	
Hose connection (optional)				
Inlet	OD=32		OD=50	
Outlet	OD=25		OD=40	
Impeller				
Nominal diameter	ø120		ø125	

Dimensions in mm (where other is not indicated)

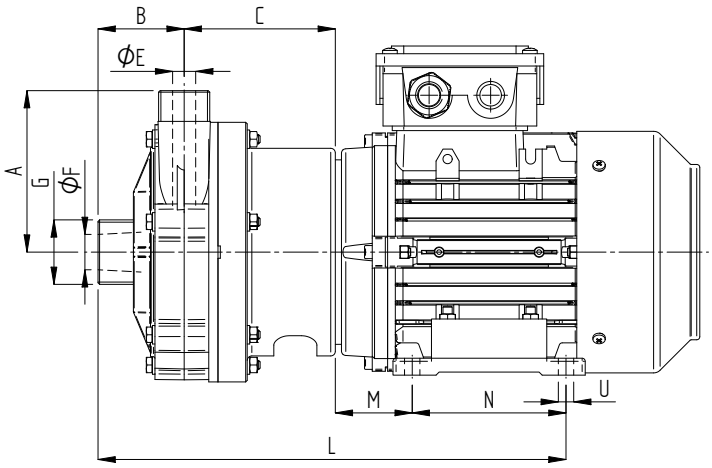

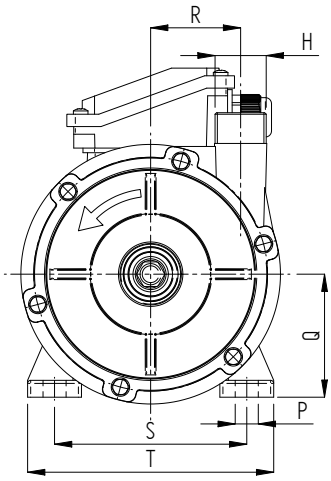

CTP Pump code

I.	II.		III.	IV.		V.		VI.	VII.
CTP	32	-	12.5	P	-	1SSV	-	07	P

I. CTP = Tapflo Mechanically Sealed Plastic Centrifugal pump
II. Pump size:
32 = Suction 1 ¼"; Discharge 1"
50 = Suction 2"; Discharge 1 ½"
III. Impeller size [mm]:
12 = 120 mm
12.5 = 125 mm
IV. Material:
P = PP (Polipropylene)
K = PVDF (Polyvinylidene fluoride)
V. Pump options:
1. Mechanical Seal
blank* = Carbon/SiC/EPDM for PP
blank* = SiC/SiC/FKM for PVDF
CSE = Carbon/SiC/EPDM
CSV = Carbon/SiC/FKM
SSV = SiC/SiC/FKM
SSF = SiC/SiC/FEP/FKM
2. O-rings:
blank* = EPDM for PP; FKM for PVDF
E = EPDM
V = FKM
F = FEP/FKM
3. Shaft material:
blank* = AISI 316L
H = Hastelloy C-276[1]
4. Optional connections
blank* = BSP thread
A = ANSI flange
F = DIN flange
H = Hose connection
5. Other options:
I = Optional impeller diameter [mm]
VI. Motor power / IEC mechanical size:
07 = 0,75 kW (mechanical size 80)
11 = 1,1 kW (mechanical size 80)
30 = 3,0 kW (mechanical size 100)
40 = 4,0 kW (mechanical size 112)
VII. Motor options
P = 1-phase 220/230 VAC
V... = Different voltage
T = PTC motor protection
F60 = 60 Hz motor
* = standard execution
[1]Hastelloy® C is a registered trademark of Haynes International, Inc.

Ask us for complete pump code with all available options and executions. Changes reserved without notice.

Product range

Diaphragm pumps & accessories

NEW

Electrically operated pumps

PE & PTFE pumps

Metal pumps

Pharmaceutical pumps

Sanitary pumps

TC Intelligent pumps

Powder pumps

TF Filter press pumps

NEW

Steinle filter press pumps

EHEDG aseptic pumps

Peristaltic Pumps

Active pulsation dampeners

Systems & accessories

Trolleys

PT pumps

PTL pumps

Centrifugal pumps, filter units & accessories

CTI & CTH centrifugal pumps

CTS self-priming centrifugal pumps

CTV vertical centrifugal pumps

CTP plastic centrifugal pumps

CTM magnetic drive centrifugal pumps

Trolleys

FT Filter units

TAPFLO AB

Sweden

Filaregatan 4 | S-442 34 Kungälv

Tel: +46 303 63390
Fax: +46 303 19916

E-mail addresses:
Commercial questions: **sales@tapflo.com**
Orders: **order@tapflo.com**
Tech support: **support@tapflo.com**

Tapflo products and services are available in 75 countries on 6 continents.

Tapflo is represented worldwide by own Tapflo Group Companies and carefully selected distributors assuring highest Tapflo service quality for our customers' convenience.

AUSTRALIA | AUSTRIA | AZERBAIJAN | BAHRAIN | BELARUS | BELGIUM | BOSNIA | BRAZIL | BULGARIA | CANADA | CHILE | CHINA | COLOMBIA | CROATIA | CZECH REPUBLIC | DENMARK | ECUADOR | EGYPT | ESTONIA | FINLAND | FRANCE | GREECE | GEORGIA | GERMANY | HONG-KONG | HUNGARY | ICELAND | INDIA | INDONESIA | IRAN | IRELAND | ISRAEL | ITALY | JAPAN | JORDAN | KAZAKHSTAN | KUWAIT | LATVIA | LIBYA | LITHUANIA | MACEDONIA | MALAYSIA | MEXICO | MONTENEGRO | MOROCCO | NETHERLANDS | NEW ZEALAND | NORWAY | POLAND | PORTUGAL | PHILIPPINES | QATAR | ROMANIA | RUSSIA | SAUDI ARABIA | SERBIA | SINGAPORE | SLOVAKIA | SLOVENIA | SOUTH AFRICA | SOUTH KOREA | SPAIN | SUDAN | SWEDEN | SWITZERLAND | SYRIA | TAIWAN | THAILAND | TURKEY | UKRAINE | UNITED ARAB EMIRATES | UNITED KINGDOM | USA | UZBEKISTAN | VIETNAM

Tapflo Group Companies

Australia
Tapflo Oceania (Pty)
Tel: +61 1800 303 633
sales@tapflo.com.au

Austria
Tapflo Austria
Tel: +43 732 27292910
sales@tapflo.at

Baltic States
Tapflo Latvia
Tel: +371 67472205
sales@tapflo.lv

Belarus
Tapflo Belarus
Tel: +375 17 3934609
sales@tapflo.by

Belgium
Tapflo Benelux B.V.
Tel: +31 (0)85 00 743 00
info@tapflo.nl

Bulgaria
Tapflo EOOD
Tel: +359 (0)2 974 18 54
office@tapflo.bg

Canada
Tapflo Canada
Tel: +1 514 813 5754
canada@tapflo.com

Croatia
Tapflo GmbH
Tel: +385 91 4884 666
sales@tapflo.hr

Czech Republic
Tapflo s.r.o.
Tel: +420 513 033 924
tapflo@tapflo.cz

China
Tapflo (Wuxi)
Tel: +86 510 8241 7072
sales@tapflo.cn

Denmark
Tapflo Danmark
Tel: +45 36 454600
info@tapflo.dk

France
Tapflo France
Tel: +33 1 34 78 82 40
info@tapflo.fr

India
Tapflo Fluid Handling India Pvt Ltd
Tel: +91 20 65000215
ac@tapflo.in

Ireland
Tapflo Ireland Ltd
Tel: +353 1 2011911
info@tapflo.ie

Italy
Tapflo Italia
Tel: +39 0362 306528
info@tapfloitalia.com

Japan
Tapflo Japan K.K.
Tel: +81-3-6240-3510
tapflojp@tapflo.co.jp

Kazakhstan
Tapflo Kazakstan
Tel: +7 727 3278347
sales@tapflo.kz

Netherlands
Tapflo Benelux B.V.
Tel: +31 (0)85 00 743 00
info@tapflo.nl

Poland
Tapflo Sp. z o.o.
Tel: +48 58 530 42 12
info@tapflo.pl

Romania
S.C. Tapflo Rom. S.r.l.
Tel: +40 21 3451255
sales@tapflo.ro

Russia
Tapflo Company
Tel: +7 495 232 18 28
sales@tapflo.com.ru

Serbia
Tapflo d.o.o.
Tel: +381 21 44 58 08
sales@tapflo.rs

Slovakia
Tapflo s.r.o.
Tel: +421 911 137 883
tapflo@tapflo.sk

Slovenia
Tapflo GmbH
Tel: +386 68 613 474
sales@tapflo.hr

Spain
Tapflo Iberica
Tel: +34 91 8093182
avives@tapfloiberica.es

South Africa
Tapflo (Pty) Ltd
Tel: +27 31 701 5255
sales@tapflo.co.za

Turkey
Tapflo Makina Ltd
Tel: +90 216 467 33 11
sales@tapflo.com.tr

Ukraine
TOB Tapflo
Tel: +380 44 222 68 44
sales@tapflo.ua

Uzbekistan
Tapflo Uzbekistan
Tel: +998 712370940
sales@tapflo.uz

United Kingdom
Tapflo (UK) Ltd
Tel: +44 2380 252325
sales@tapflopumps.co.uk

www.tapflo.com

Tapflo® is a registered trademark of Tapflo AB. All rights reserved.
Information in this document is subject to change without notice. Reproduction in any manner without written permission of Tapflo Group is forbidden.
Tapflo Group reserves the right to make changes in product design, or detail, and to discontinue any product or material without notice.

Art. No. 10-2217